CURVE MICRO 16 PNP

Quick Start Guide

V1.0

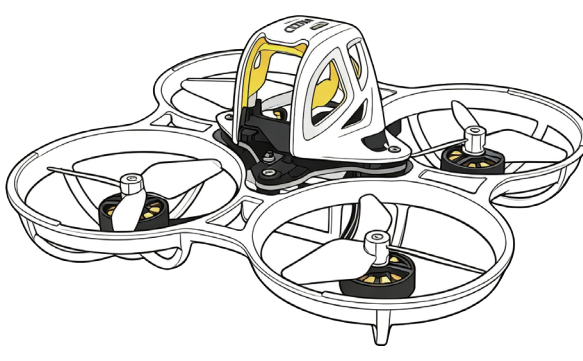

Part Name

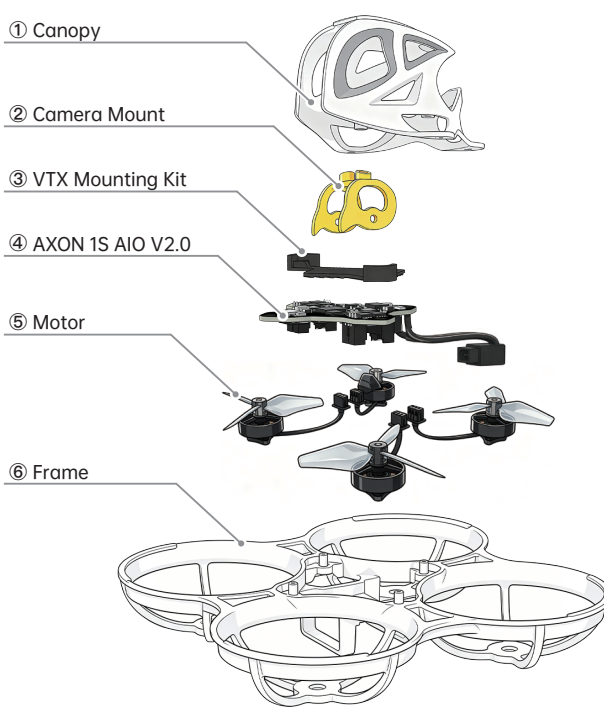

*This product is a visible light camera

VTX Installation and Connection

VTX Connection (Using the Ascent Lite+ Kit as an example)

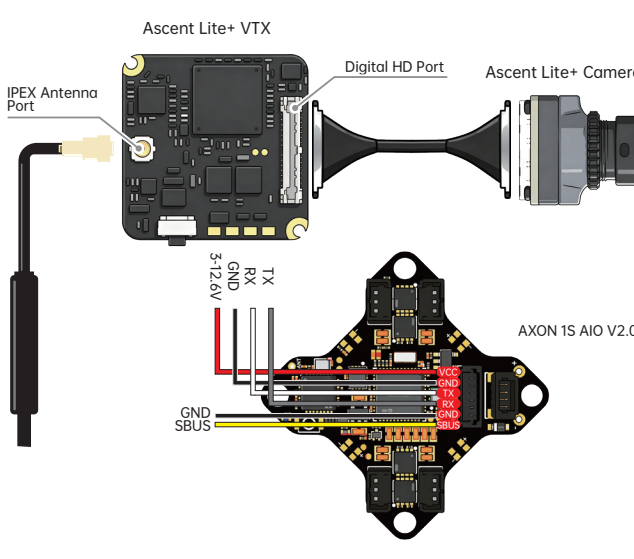

VTX Installation

(Installation Steps Using the Ascent Lite+ as an Example)

1. Align the yellow silicone camera mount with the mounting holes on the canopy from below and insert it, then secure it to the canopy using M1×3 self-tapping screws (as shown in Figure 1-1).
2. Place the Ascent Lite+ camera onto the mount from below the canopy upward. Align the mounting holes of the mount and the camera, then tighten the M2×3 hex screws to complete the camera installation (as shown in Figure 1-2).

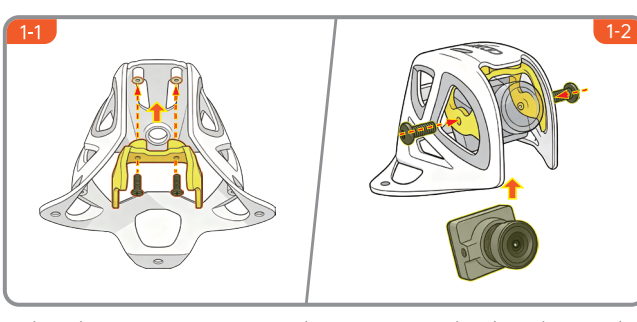

3. Place the Ascent Lite+ VTX onto the VTX mounting bracket. Align it with the VTX mounting holes on the canopy, then secure it using M1.4×5 self -tapping screws. This completes the installation of the VTX kit onto the canopy (as shown in Figure 1-3).
4. Align the canopy with the flight controller mounting holes on the frame, then tighten the M1.4×5 self-tapping screws with 4mm washers. This completes the VTX kit installation for the Curve Micro 16 (as shown in Figure 1-4).

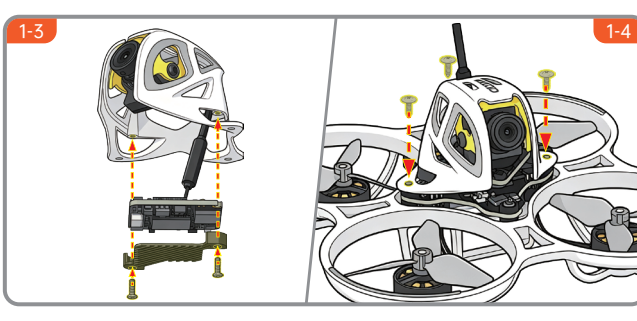

FC Connection

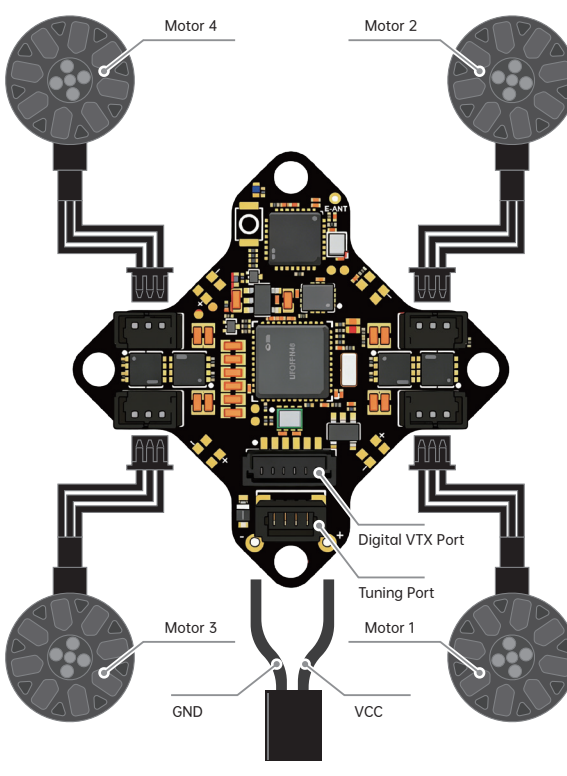

FC pad port

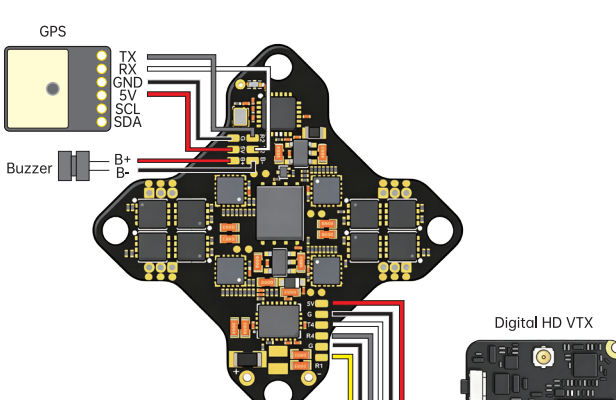

Transmitter Linking

Curve Micro 16Enter Link Mode:

1. Power on the Curve Micro 16 by connecting a 1S battery to its A30 port.
2. Linking Method:

① Plug in and unplug the battery connector three times consecutively, and keep it powered on on the third plug-in within 5 seconds. The built-in ELRS receiver enters linking mode with the blue LED flashing twice repeatedly (See Figure 2-1).

② Press and hold the BOOT button for 2 seconds with a toothpick or safety pin to enter linking mode; the blue LED will flash twice repeatedly afterentering linking mode (See Figure 2-2).

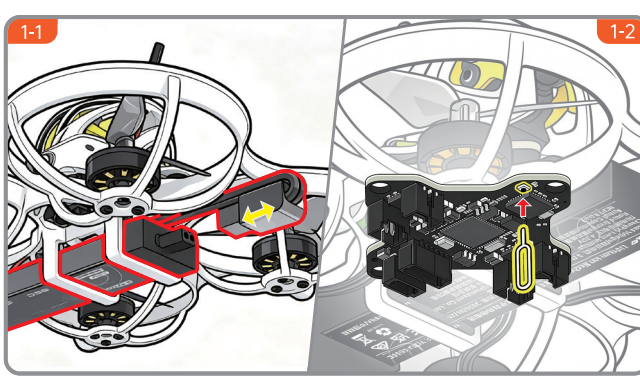

Link Transmitter (Take CADDXFPV Alink Transmitter as an example):

1. Press and hold the power button ① of the transmitter. The unit powers on when four indicator lights light up sequentially and stay solid with a "do-re -mi, do-mi" tone prompt.
2. Short-press the bind button ② twice. Four LEDs flash in pairs to enter linkng status. Upon successful linking, the transmitter plays a "do-mi" sound and the flight controller's blue LED remains steadily on.

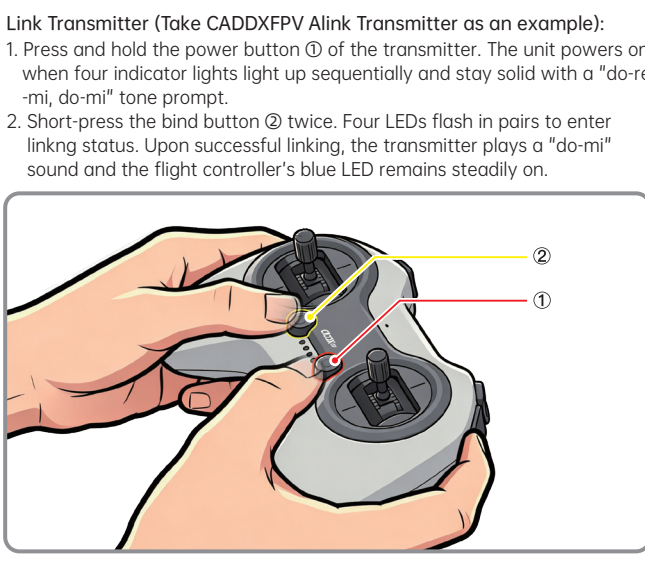

Note: The flight controller has a built-in ELRS 2.4G receiver, compatible with all mainstream ELRS 2.4G transmitters. Its factory firmware version is ELRS V3.5.0.

Remote Control Unlock Operation

1. Keep the throttle stick at the lowest position.
2. Press the unlock button on the transmitter (SE corresponds to CH5 channel), then push up the throttle to take off.

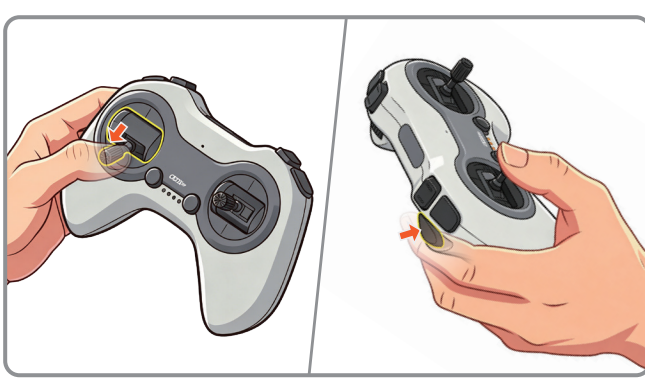

Note: The video transmitter generates substantial heat. Please start flying promptly after powering on to prevent damage caused by overheating.

Disclaimer on the Use of Unauthorized Third-Party Accessories

To ensure safe operation and stable performance of the device, our company hereby solemnly reminds you:
All commissioning and maintenance operations must be performed with officially certified original connecting wires and connectors. The use of any third-party cables and accessories during commissioning is strictly prohibited. Any equipment failure, data loss, abnormal performance, potential safety hazards and other direct or indirect losses arising from the use of non-official accessories shall be fully borne by the party conducting the irregular operation, and our company shall not be held liable in any way.

Specifications

Model	Curve Micro 16		
FC	AXON 1S AIO V2.0	Wheelbase	75mm
ESC	1S 12A	PWR Port	A30
Receiver	ELRS V3.5.0	Flight Time	6min
Motor	1102	Weight	32g (±2g)
Propeller	HQ 40mm 1.6X1X3		

FC	AXON 1S AIO V2.0		
Processor	STM32G473	FC Firmware	CADDXG473-2026.6
Gyroscope	ICM42688 /BMI270	ESC Current	12A (Continuous);18A (Peak)
Blackbox	16M	ESC Firmware	A-X-5
BEC	5V3A	Tune Port	SH1.0-4P
FC Voltage	1S	Motor Port	JST1.25-3P

CADDXFPV Technical Support
Email: support@caddxfpv.com

CURVE MICRO 16 PNP

快速入门指南

V1.0



部件定义



*此产品为可见光摄像头

图传安装与接线

图传接线示意 (以 Ascent Lite+ 图传套装示例)

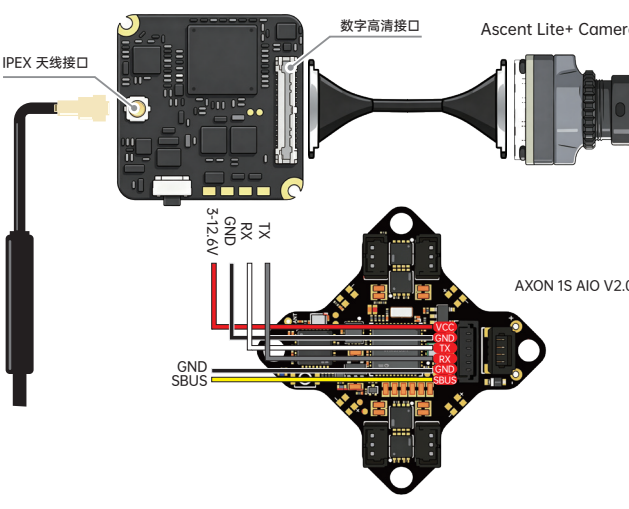

图传安装

(安装步骤以 Ascent Lite+ 示例)

1. 将黄色硅胶相机支架从下对准头罩孔位插入并使用 M1*3 自攻螺丝安装在头罩中 (如图 1-1 所示);
2. Ascent Lite+ 相机由头罩下方往上放入支架上，对齐支架与相机的孔位，拧上 M2*3 六角螺丝，完成相机安装 (如图 1-2 所示);

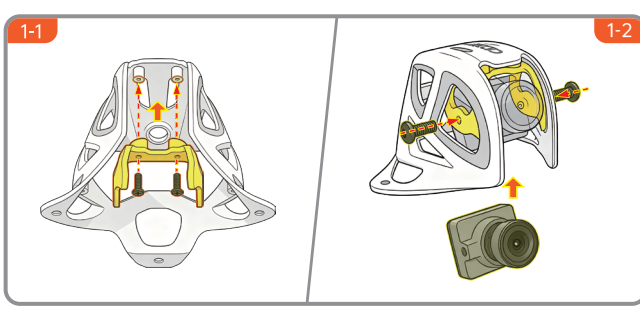

3. Ascent Lite+ VTX 放置图传固定件上，对齐头罩的图传安装孔后使用 M1.4x5 自攻螺丝进行安装，完成图传套装安装至头罩 (如图1-3 所示);
4. 将头罩部位对齐机架的飞控安装孔位，拧上 M1.4x5 带 4mm 垫片自攻螺丝，即可完成 Curve Micro 16 的图传套装安装(如图 1-4 所示)。

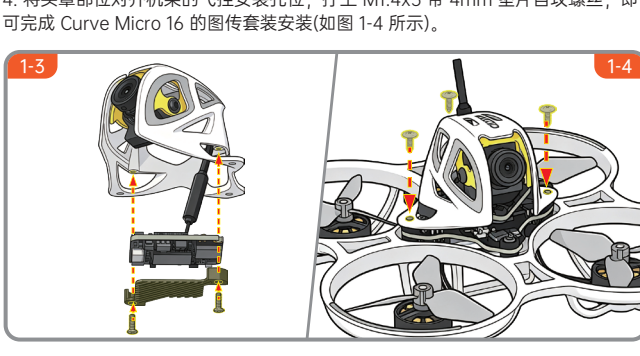

飞控接线示意

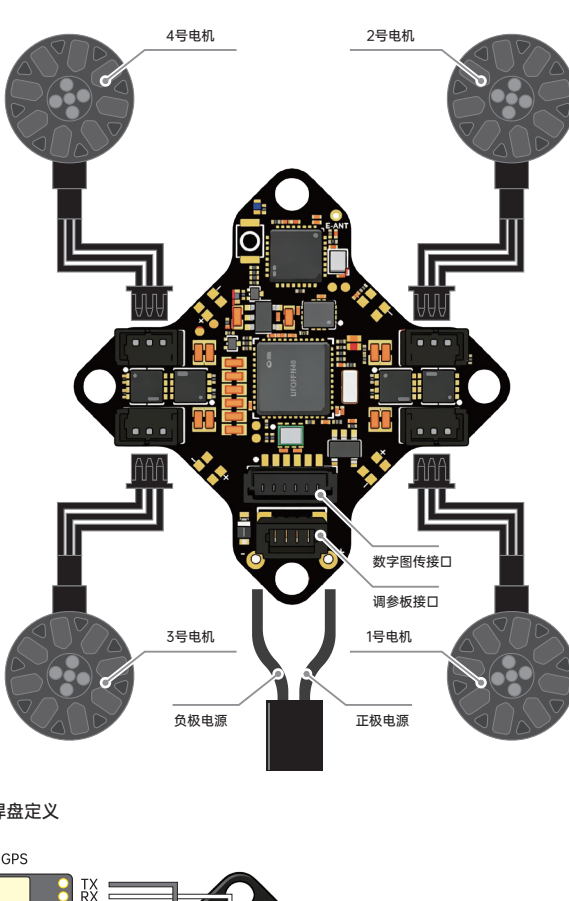

飞控焊盘定义

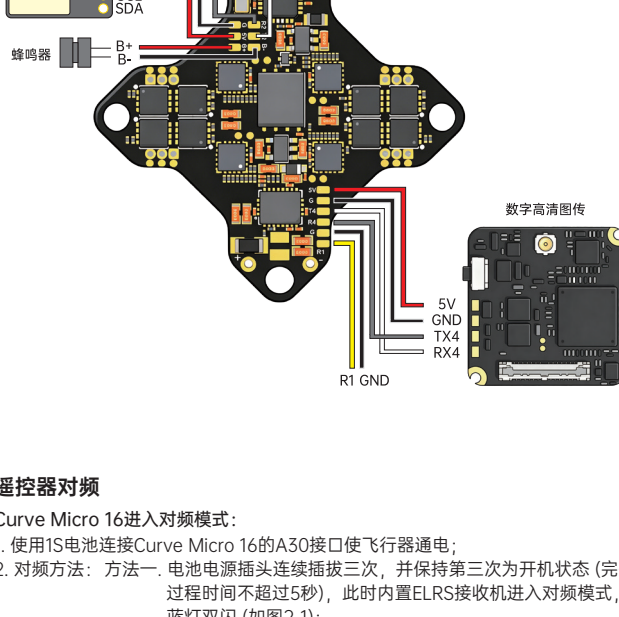

遥控器对频

Curve Micro 16进入对频模式:

1. 使用1S电池连接Curve Micro 16的A30接口使飞行器通电;
2. 对频方法: 方法一. 电池电源插头连续插拔三次，并保持第三次为开机状态 (完整过程时间不超过5秒)，此时内置ELRS接收机进入对频模式，蓝灯双闪 (如图2-1);
   方法二. 使用牙签或者别针，长按两秒BOOT按键进入对频模式，进入对频模式后蓝灯双闪 (如图2-2)。



绑定遥控器 (以CADDXFPV Alink遥控器为例):

1. 长按遥控器①电源按钮，待待四灯依次亮起并常亮，发出"do-re-mi，do-mi"时为开机。
2. 短按两次遥控器②对频按键，四灯双闪进入对频状态，对频成功后，遥控器发出"do-mi"，飞控蓝色LED常亮。



注: 飞控内置ELRS2.4G接收机，可兼容市面上任意ELRS2.4G遥控器，出厂接收机固件版本为ELRS V3.5.0。

解锁起飞

1. 油门摇杆保持最低位置;
2. 按下遥控器解锁按钮（SE 对应CH5通道），向上推油门即可起飞。



(注意: 因图传发热量较大，请在通电后尽快起飞)

关于未经授权使用第三方配件的责任声明

为保障设备运行安全与性能稳定，本公司郑重提示:
所有调试及维护操作必须使用经由官方认证的原装连接线与连接器。严禁在调试过程中使用任何第三方线材及配件。使用非官方配件所引发的设备故障、数据丢失、性能异常、安全隐患及其他直接或间接损失，均由违规操作方自行承担全部责任，本公司概不负责。

参数规格

型　　号	Curve Micro 16		
飞　　控	AXON 1S AIO V2.0	轴　　距	75mm
电　　调	1S 12A	电池接口	A30
接 收 机	ELRS V3.5.0	续　　航	6min
电　　机	1102	重　　量	32g (±2g)
桨　　叶	HQ 40mm 1.6X1X3		

飞控型号	AXON 1S AIO V2.0		
处 理 器	STM32G473	飞控固件	CADDXG473-2026.6
陀 螺 仪	ICM42688 /BMI270	电调电流	12A (持续);18A (峰值)
黑 匣 子	16M	电调固件	A-X-5
BEC	5V3A	调参端口	SH1.0-4P
飞控电压	1S	电机端口	JST1.25-3P

CADDXFPV 技术支持
Email: support@caddxfpv.com